WATER COOLED ELECTRO SPINDLE

PRODUCTIVITY
SOLUTIONS

Kuvam
Partners For Your Growth

❖ Kuvam's Mission:

" Kuvam Technologies Pvt. Ltd is on a mission to help Machine Builder to build world class machines at very attractive prices by using technologies which will help them manufacture highly reliable products. "

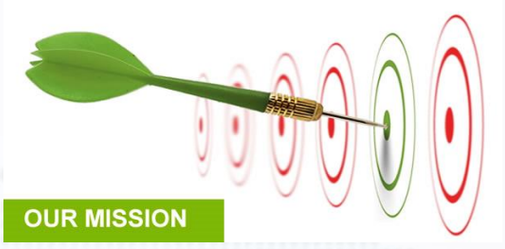

❖ Kuvam's Phylosophy:

We at Kuvam Technologies believe in win-win-win relationship i.e.

WIN FOR CUSTOMER

WIN FOR TEAM

WIN FOR KUVAM

❖ Who we are:

We help Machine Builders to build world class machines at attractive prices by supplying various mechatronics Product like CNC milling spindle, CNC Rotary table CNC hydraulic Index table, Grinding spindle, Electro spindle, Automatic Tool Changer, servo Turret, 2 axes head, Built in cylinder power chucks . Angle heads, hardened and ground rack & pinions and work holding solutions etc.

The products we offer are carefully selected, inspected on defined quality parameters by our quality controllers to make sure that they are free from all kinds of manufacturing defects.

The kind of customers who love our work are the ones who want to increase their productivity and improve their return on investment. Our products are very reliable and offer high value that provide peace of mind to our customers. Unlike, other supplier we believe in serving and not selling. We completely safeguard our customer's interest.

Water Cooled Spindle

Model	KTZ65-0.8
Power	0.8kW
Diameter	ϕ65mm
Speed	24000rpm
Voltage	220V
Current	2.5A
Frequency	400Hz
Joint of nose	ER11(ϕ3.175-ϕ7)
Cool	Water cooling
Brand	KUVAM
Torque	0.32Nm
Weight	2.8KG

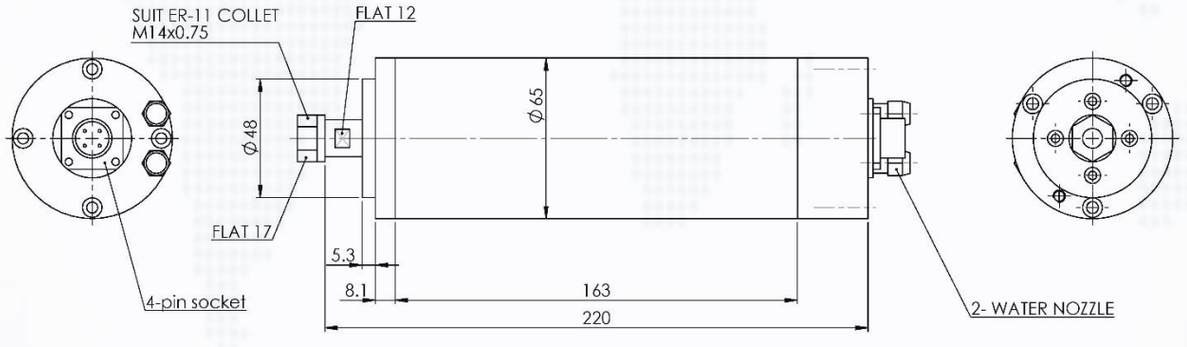

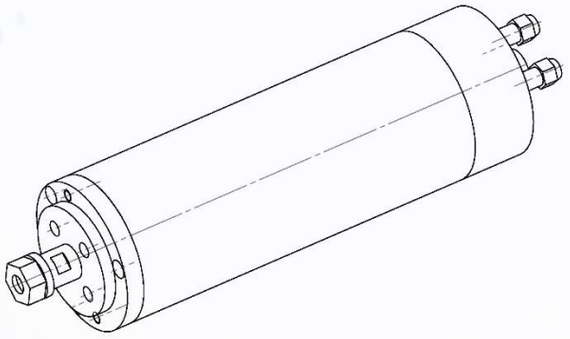

WIRING DESCRIPTION	
Pin	4-pin socket
1	U frequency converter phase
2	V frequency converter phase
3	W frequency converter phase
4	Wring ground

DO NOT SCALE DRAWING | REVISION

POWER	VOLTAGE	CURRENT	SHAFT	FREQUENCY	COOL
0.8KW	220V	2.5A	ER11	400HZ	Water

TITLE: ELECTRO SPINDLE

SPEED: 24000 RPM
WEIGHT: 2.8 KG

DWG NO. KTZ65-0.8.ER11 | A3

SCALE: 1:1.5 | SHEET 1 OF 1

[CAUTION]
ROTATING MODE: Anticlockwise from the shaft extension end

Water Cooled Spindle

Model	KTZ80-1.5
Power	1.5kW
Diameter	Φ80mm
Speed	24000rpm
Voltage	220V
Current	6.0 A
Frequency	400Hz
Joint of nose	ER16(ϕ3.175-ϕ10)
Cool	Water cooling
Brand	KUVAM
Torque	0.56Nm
Weight	4.4KG

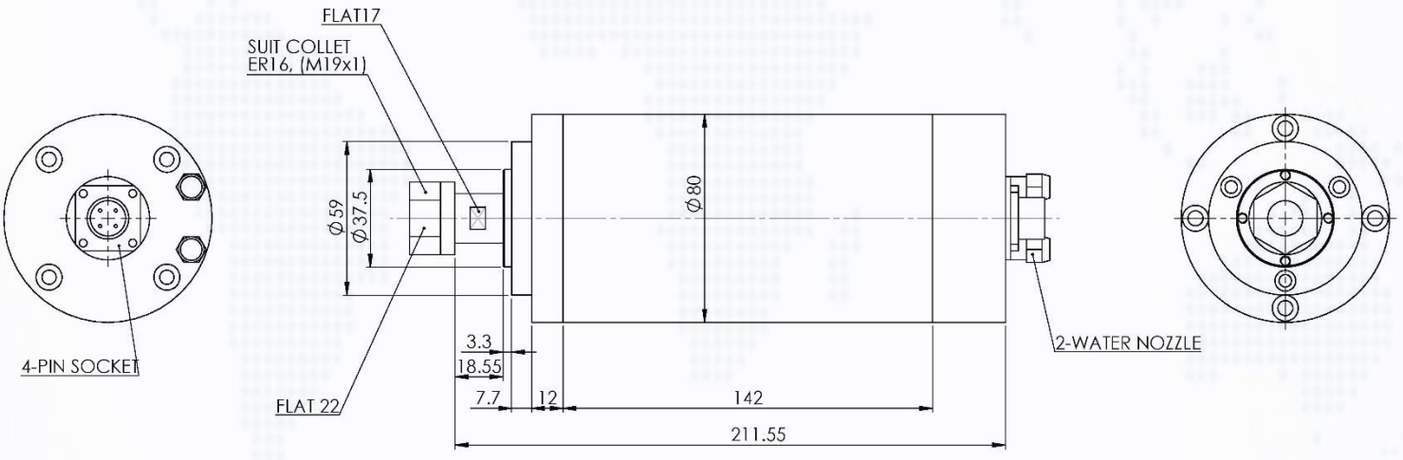

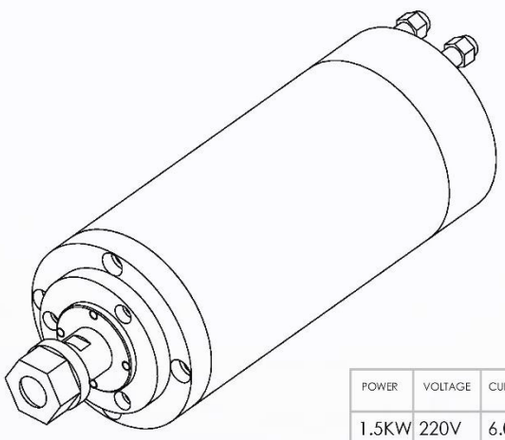

WIRING DESCRIPTION	
Pin	4-pin socket
1	U frequency converter phase
2	V frequency converter phase
3	W frequency converter phase
4	Wring ground

DO NOT SCALE DRAWING | REVISION

POWER	VOLTAGE	CURRENT	SHAFT	FREQUENCY	COOL
1.5KW	220V	6.0A	ER16	400HZ	Water

TITLE: Electro Spindle

SPEED: 24000 RPM
WEIGHT: 4.4 KG

DWG NO. KTZ80-1.5.ER16 | A3

SCALE: 1:1.5 | SHEET 1 OF 1

[CAUTION]
ROTATING MODE: Anticlockwise from the shaft extension end

Water Cooled Spindle

Model	KTZ80-2.2
Power	2.2 kW
Diameter	Φ80mm
Speed	24000rpm
Voltage	220V
Current	8.0 A
Frequency	400Hz
Joint of nose	ER20 (ϕ3.175-ϕ13)
Cool	Water cooling
Brand	KUVAM
Torque	0.85Nm
Weight	4.7 KG

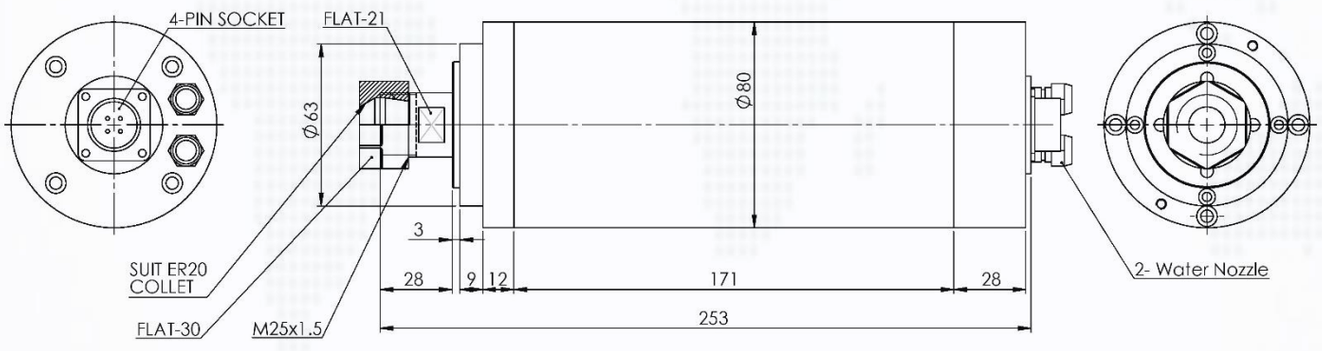

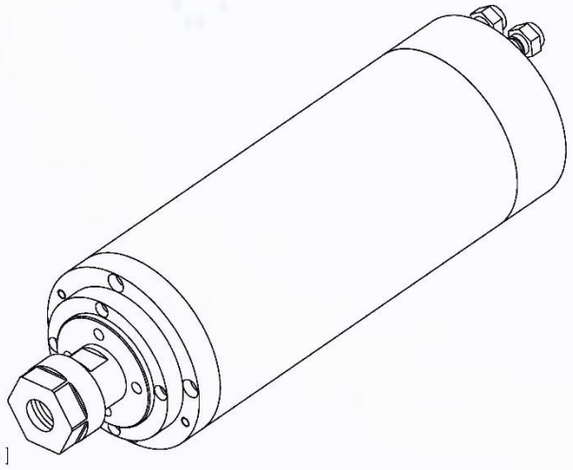

[CAUTION]
ROTATING MODE: Anticlockwise from the shaft extension end

WIRING DESCRIPTION	
Pin	4-pin socket
1	U frequency converter phase
2	V frequency converter phase
3	W frequency converter phase
4	Wring ground

DO NOT SCALE DRAWING | REVISION

POWER	VOLTAGE	CURRENT	SHAFT	FREQUENCY	COOL
2.2 KW	220V	8.0A	ER-20	400 Hz	WATER

TITLE: ELECTRO SPINDLE

SPEED: 24000 RPM
WEIGHT: 4.7 KG

DWG NO. KTZ80-2.2-ER20 | A3

SCALE:1:1.5 | SHEET 1 OF 1

Water Cooled Spindle

Model	KTZ100-3.2
Power	3.2 kW
Diameter	Φ100mm
Speed	24000rpm
Voltage	220V
Current	10.0 A
Frequency	400Hz
Joint of nose	ER20 (ϕ3.175-ϕ13)
Cool	Water cooling
Brand	KUVAM
Torque	1.27 Nm
Weight	8.3 KG

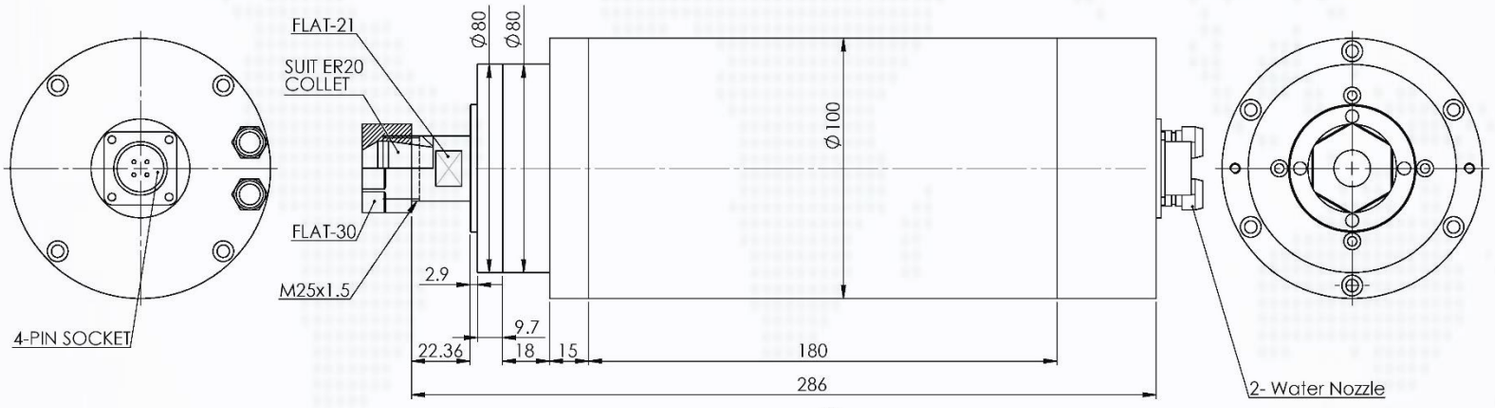

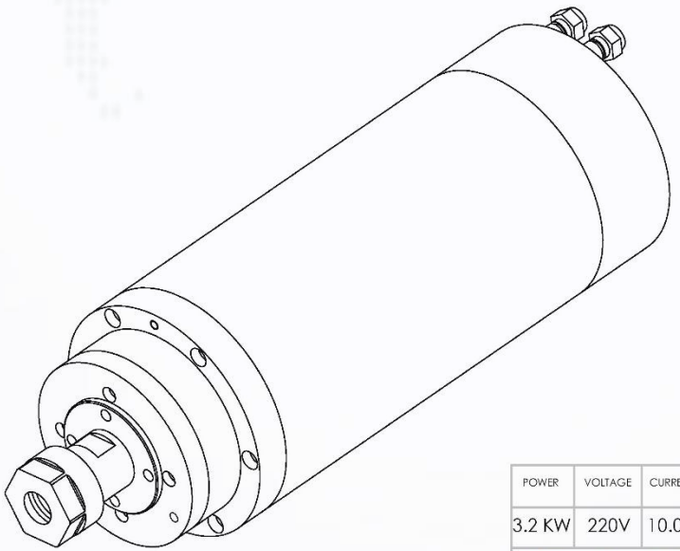

[CAUTION]
ROTATING MODE: Anticlockwise from the shaft extension end

WIRING DESCRIPTION	
Pin	4-pin socket
1	U frequency converter phase
2	V frequency converter phase
3	W frequency converter phase
4	Wring ground

DO NOT SCALE DRAWING | REVISION

POWER	VOLTAGE	CURRENT	SHAFT	FREQUENCY	COOL
3.2 KW	220V	10.0A	ER-20	400 Hz	WATER

SPEED: 24000 RPM
WEIGHT: 8.3 KG

TITLE: ELECTRO SPINDLE
DWG NO. KTZ100-3.2-ER20 | A3
SCALE: 1:1.5 | SHEET 1 OF 1

Water Cooled Spindle

Model	KTZ80-3.7Z
Power	3.7 kW
Diameter	Φ100mm
Speed	24000rpm
Voltage	380V
Current	7.0 A
Frequency	400Hz
Joint of nose	ER20 (ϕ3.175-ϕ13)
Cool	Water cooling
Brand	KUVAM
Torque	1.45 Nm
Weight	8.8 KG

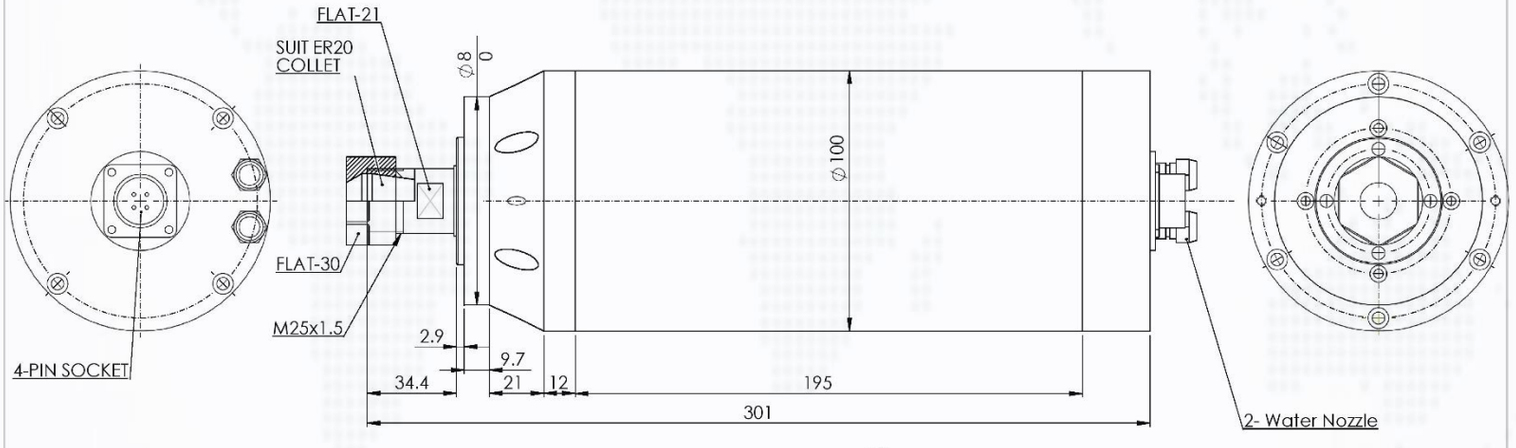

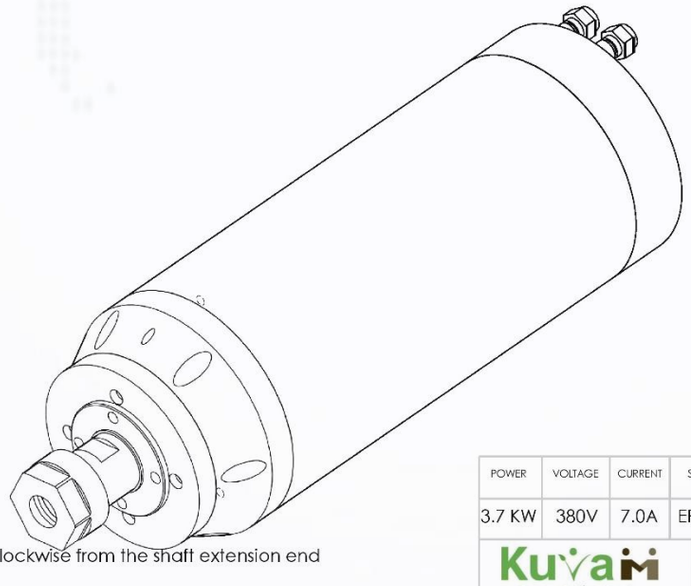

[CAUTION]
ROTATING MODE: Anticlockwise from the shaft extension end

WIRING DESCRIPTION	
Pin	4-pin socket
1	U frequency converter phase
2	V frequency converter phase
3	W frequency converter phase
4	Wring ground

DO NOT SCALE DRAWING | REVISION

POWER	VOLTAGE	CURRENT	SHAFT	FREQUENCY	COOL
3.7 KW	380V	7.0A	ER-20	400 Hz	WATER

TITLE: ELECTRO SPINDLE

SPEED: 24000 RPM
WEIGHT: 8.8 KG

DWG NO. KTZ100-3.7Z-ER20 | A3

SCALE:1:1.5 | SHEET 1 OF 1

Water Cooled Spindle

Model	KTZ125-6.0Z
Power	6.0 kW
Diameter	Φ125mm
Speed	24000rpm
Voltage	380V
Current	14.5A
Frequency	400Hz
Joint of nose	ER25 (ϕ3.175-ϕ16)
Cool	Water cooling
Brand	KUVAM
Torque	3.18 Nm
Weight	23.4 KG

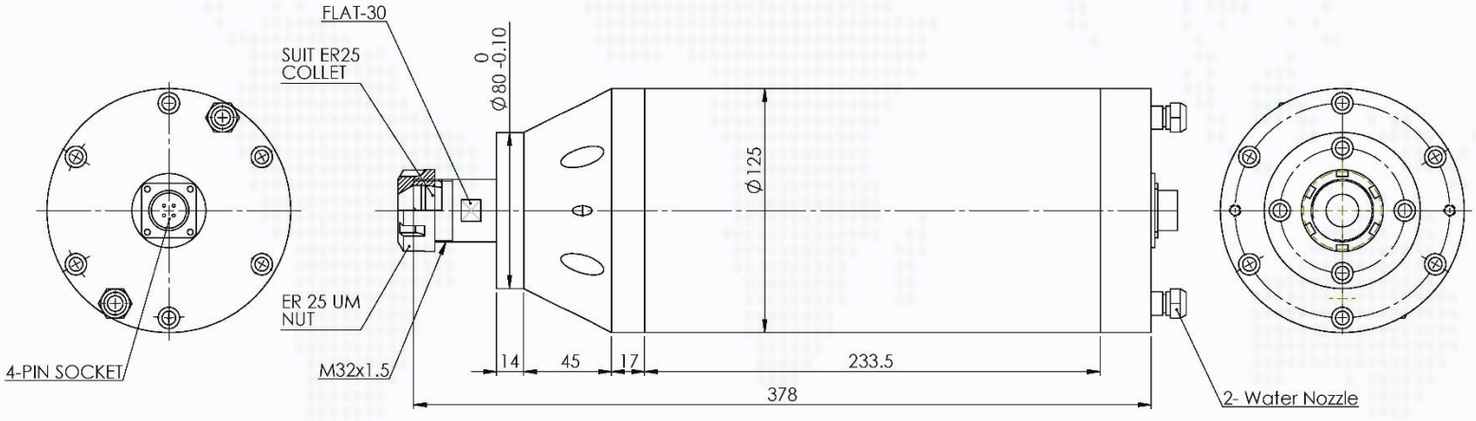

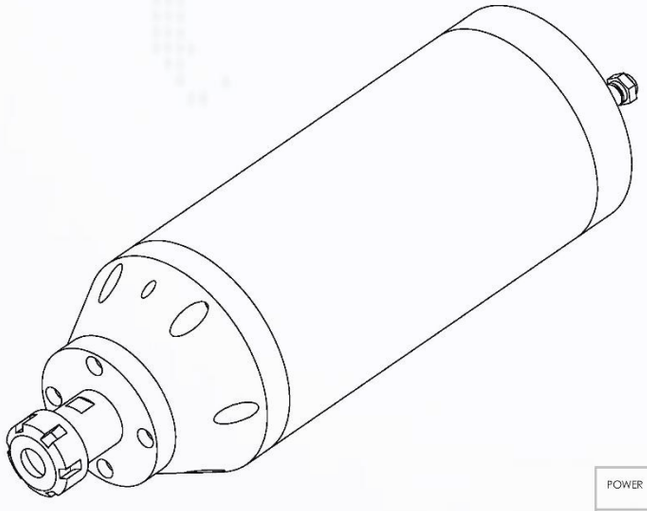

[CAUTION]
ROTATING MODE: Anticlockwise from the shaft extension end

WIRING DESCRIPTION	
Pin	4-pin socket
1	U frequency converter phase
2	V frequency converter phase
3	W frequency converter phase
4	Wring ground

DO NOT SCALE DRAWING | REVISION

POWER	VOLTAGE	CURRENT	SHAFT	FREQUENCY	COOL
6 KW	380V	14.5A	ER-25	400 Hz	WATER

SPEED: 24000 RPM
WEIGHT: 23.4 KG

TITLE: ELECTRO SPINDLE
DWG NO. KTZ125-6.0Z-ER25 | A3
SCALE:1:2 | SHEET 1 OF 1

Water Cooled Spindle

Model	KTZ125-7.5Z
Power	7.5 kW
Diameter	Φ125mm
Speed	24000rpm
Voltage	380V
Current	16.0 A
Frequency	400Hz
Joint of nose	E32 (ϕ3.175-ϕ20)
Cool	Water cooling
Brand	KUVAM
Torque	5.76 Nm
Weight	26.5 KG

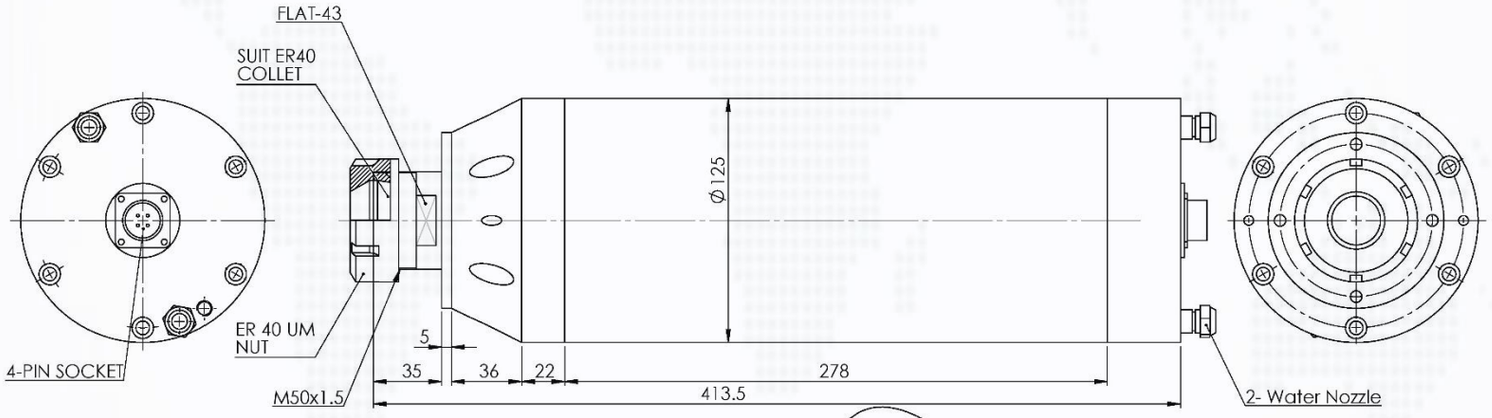

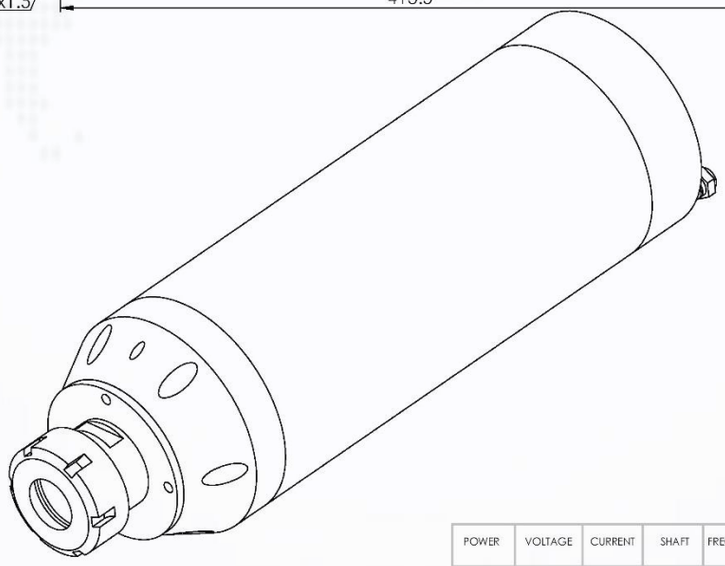

WIRING DESCRIPTION	
Pin	4-pin socket
1	U frequency converter phase
2	V frequency converter phase
3	W frequency converter phase
4	Wring ground

DO Nnot SCALE DRAWING | REVISION

POWER	VOLTAGE	CURRENT	SHAFT	FREQUENCY	COOL
7.5 KW	380V	16.0A	ER-40	800 Hz	WATER

TITLE: ELECTRO SPINDLE

SPEED: 24000 RPM
WEIGHT: 28 KG

DWG NO. KTZ125-7.5Z-ER40 | A3

SCALE:1:2 | SHEET 1 OF 1

[CAUTION]
ROTATING MODE: Anticlockwise from the shaft extension end

Kuvam's CSR Initiative:

Kuvam Technologies will donate some of its profits to poor farmers in the form of fruit bearing plants. This will be our small contribution to help the nation to fight global warming and to increase the formers income.

Kuvam

Partners For Your Growth

KUVAM TECHNOLOGIES PVT LTD

Plant: C-22/13. FF, Sector-57, Noida-201301
Uttar Pradesh,(India)
Tel No: +91 120 4571546
New Delhi: +91 8448996970, 9312221276,
Gujarat: +91 9319293895
Bangalore: +91 9319293897
Service: +91 8448996971
Email : sales@kuvamtechnologies.com

FOLLOW US